SCHLETTER
The Solar Mounting Group

FS DUO

INSTALLATION MANUAL

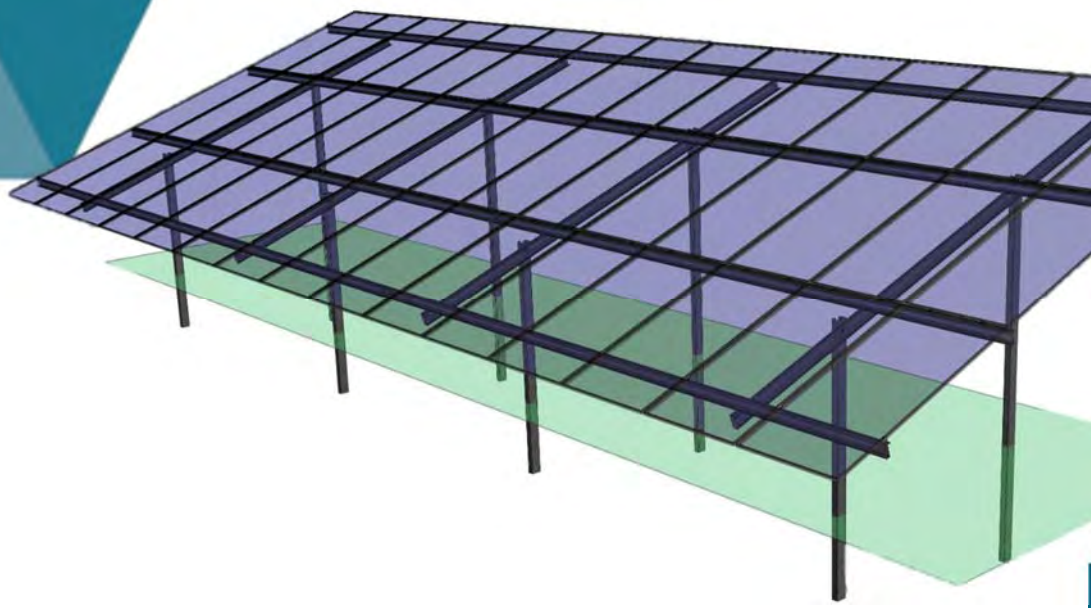

Table of contents

Mounting 4

1. GENERAL INFORMATION 4

1.1 Short description of the system 4

1.2 Scope of the installation manual 4

1.3 Appropriate use 4

1.4 Copyrights and property rights 4

1.5 Safety Instructions 5

1.6 Obligation of the Operator 7

1.7 Obligation of the personnel 7

1.8 Qualification of the personnel 8

1.9 Additional assembly-relevant documents 8

2. TRANSPORT, LOADING AND UNLOADING 9

2.1 Delivery of the components 9

2.2 Preparation of delivery 9

2.3 Providing forklifts and lifting equipment 10

2.4 Inspection of the scope of delivery 10

2.5 Storage of the components 11

3. TECHNICAL SPECIFICATIONS 12

3.1 System designation and specifications 12

3.2 Mounting Tolerances 13

4. SYSTEM OVERVIEW 14

4.1 System overview for system with portrait module arrangement and combined clamping 14

4.1.1 Components 14

4.2 System overview for system with portrait module arrangement and quarter-point clamping 15

4.2.1 Components 15

4.3 System overview for system with landscape module arrangement and rafters with module clamp 16

4.3.1 Components 16

5. COMPONENT OVERVIEW 17

6. ASSEMBLY INSTRUCTIONS 19
6.1 Building ground 19
7. FOUNDATION 20
7.1 Verification of the GPS-Points 20
7.2 Pile-driving tolerances 21
7.3 Pile-driving obstacles and concrete-embedding of the posts 21
7.4 Tools 22
7.5 Positioning and staking of the foundation posts 22
7.6 Pile driving 23
7.7 Rack Mounting 23
7.8 Module mounting 24
7.9 Torque specifications 24
8. INSTALLATION STEPS 25
8.1 Pile driving and application of corrosion protection 25
8.2 FS Hybrid – Concrete rings 26
8.3 Pile extension 27
9. RACK MOUNTING - GIRDERS & PURLINS 29
9.1 Fastening of the girders on the foundation posts. 29
9.2 Mounting of the purlins 30
9.3 Imprint on slotted purlins 32
10. INSTALLING THE PURLIN CONNECTOR 33
11. INSTALLING THE RAFTERS (FOR LANDSCAPE INSTALLATION) 33
12. MODULE INSTALLATION (¼ POINT LANDSCAPE INSTALLATION) 33
13. MODULE INSTALLATION (PORTRAIT MOUNTING) 35
13.1 Special case combined clamping 37
13.2 Special case adapter for bifacial modules 39
14. MAINTENANCE AND CARE 41
15. DISASSEMBLY AND DISPOSAL 42
15.1 Safe disposal of individual parts 43
16. WARRANTY AND LIABILITY 43
16.1 Disclaimer 43

1. GENERAL INFORMATION

1.1 Short description of the system

The FS Duo is a material optimised steel-system for the mounting of photovoltaic modules in open areas. The support structure is made of zinc-magnesium coated or continuously hot-dip coated steel, the fastening elements and screws consist of zinc-flake coated steel or stainless steel and the rafters (module-bearing profiles) are made of aluminium. Depending on the module orientation, the FS Duo is installed with or without rafters.

Accessories for the cable management or components for the potential equalization in the mounting system can be installed additionally. The cable duct is already integrated in the purlin.

1.2 Scope of the installation manual

These mounting instructions explicitly only provide instructions for the mechanical mounting of the FS Duo. They expressly do not give instructions for working procedures in connection with electrical or electronic components! Please note that any work in connection with electrical or electronic components may only be carried out by appropriately qualified personnel.

1.3 Appropriate use

The FS Duo serves as a substructure for the installation of photovoltaic modules. Any other and/or additional use or incorrect assembly (e.g. use of third-party components) or non-observance of tolerance specifications are considered as improper use and exclude any liability of the manufacturer. Any use under conditions other than those assumed in the planning is also considered as improper use and leads to the loss of any liability claims against the manufacturer.

This applies in particular if the system is used under other load conditions, under other soil conditions, under other climatic conditions and/or under other corrosion conditions than originally assumed. Schletter Solar GmbH is in no case responsible for damages to the product itself or consequential damages caused by the product which are the result of an inappropriate handling of the product.

Schletter Solar GmbH is in particular not responsible for outages or faults resulting from modifications made by the customer or other persons. There is no entitlement to the availability of previous versions or to the re-fitting of delivered components to the current series status.

1.4 Copyrights and property rights

The entire content of these mounting instructions is the intellectual property of Schletter Solar GmbH and is subjected to the German copyright law. Any multiplication, modification, distribution, surrender to third parties - even in excerpts - and any kind of use exceeding the limits of the copyright law require the written consent of the Schletter Solar GmbH.

Schletter Solar GmbH explicitly reserves the right to take legal steps in the case of violation. These assembly instructions are subject to change without notice. Any product names mentioned in these assembly instructions are trademarks of the Schletter Solar GmbH and are herewith acknowledged.

Schletter Solar GmbH has made significant efforts to ensure that these assembly instructions are free of errors and omissions. Should nevertheless doubts arise as to the correctness and/or completeness of the instructions, the installer is obliged to consult the manufacturer. No liability or responsibility is assumed by Schletter Solar GmbH for potential errors contained in these assembly instructions or for incidental, concrete or consequential damages resulting from the provision of these assembly instructions.

1.5 Safety Instructions

Read these assembly instructions carefully before starting the assembly and keep them safely at hand! Comply with all regional and national valid standards, building regulations and accident prevention regulations!

Make sure to read and understand the safety and **warning instructions** in these assembly instructions and apply them in any case, depending on the conditions and working tasks!

This manual contains instructions that must be followed for your personal safety and to avoid personal injury or property damage. These are marked by a warning triangle. Depending on the type and degree of danger, warning notices are illustrated as follows:

DANGER
indicates that death or serious physical injury **will** occur if the required safety measures are not taken.

WARNING
indicates that death or serious physical injury **may** occur if the required safety measures are not taken.

CAUTION
indicates that minor physical injury **may** occur if the required safety measures are not taken.

DANGER
by handling of electric current. This can lead to severe accidents and cause major injuries. Appropriate safety precautions must be taken.

SECURING OF THE WORKING AREA
Prior to the beginning of the mounting operations, the construction site must be inspected by a supervising person by visual inspection or by means of plans showing all supply lines. For this purpose, the location of all types of underground supply lines must be identified with marking paint or barriers and non-load-bearing ground or fall-risk zones must be blocked by stable barriers or warning boards.

Important information and advice
concerning the product and its handling and assembly are marked by this symbol.

ATTENTION
warns you of situations that can lead to material damage and disturbance in the workflow if the instructions are not observed.

REFERENCES
Assembly-related documents that are not part of these mounting instructions are indicated by this symbol.

By all means the following personal protective equipment must be worn for the installation of FS Duo:

Wear high visibility vest and safety shoes at any time

Wear ear protection during noisy activities

Wear a safety helmet when working with falling loads or risk of impact

Wear protective gloves when working with sharp-edged parts

Wear respiratory protection for all dusty activities

Wear safety glasses at grinding and cutting activities, as well as activities where eyes are endangered by flying parts/liquids

Wear safety shoes at any time

Furthermore, please observe the rules and regulations for accident prevention and environmental protection valid for the place of installation, as well as any work and operating instructions of the operator and the premises.

1.6 Obligation of the Operator

It is the obligation of the operator to ensure that all parts of the mounting instructions are kept within easy reach on the PV-plant for the fitters at any time.

The operator is obligated to only allow persons to work on and in the area of the plant who:

- are qualified for the respective activity and have read and understood the relevant parts of the mounting instructions
- are aware of the essential regulations on work safety, accident prevention and environment protection
- have been briefed on the safe handling of the installation (instruction)

Prior to the beginning of the installation, the operator defines a supervising person and ensures that

- the building site is inspected and secured with the help of plans showing all supply lines and that the location of all types of underground supply lines and non-load-bearing grounds are marked in a suitable way or blocked by barriers.

1.7 Obligation of the personnel

As personnel, only persons who can be expected to carry out their work reliably can be admitted. Persons whose responsiveness is affected, e.g. by narcotics, alcohol or medication, are NOT permitted.

- Any person involved in the installation of the FS Duo must have read and understood these mounting instructions, especially the chapter "1.5. safety instructions", as well as all relevant chapters relating to the respective activity.
- These mounting instructions must be kept accessible and at hand for all persons involved at any time.
- Only trained and instructed personnel may perform the activities specified in this document.
- Auxiliary personnel may only work on the installation of the FS Duo under the supervision of an experienced person.

It is recommended to the operator to have each of these confirmed in writing.

1.8 Qualification of the personnel

These mounting instructions are intended for qualified personnel for the sections transport and loading, mounting, dismounting and disposal with the following qualifications:

- Based on their professional training, experience, knowledge and the knowledge of the applicable regulations, the qualified personnel are able to carry out the work assigned to them and to independently recognize and avoid potential risks.
- The qualified personnel have the necessary knowledge of the safety, accident prevention and environmental protection guidelines applicable at the relevant construction site, as well as the regulations for loading and unloading.
- The qualified personnel hold the required driving licences to drive the construction site vehicles and building machinery at the construction site.
- The qualified personnel is sufficiently trained for the respective tasks.

1.9 Additional assembly-relevant documents

In addition to these mounting instructions, the following documents are required for the installation of the FS Duo:

- Pile-driving plan & dimensional chain
- Overview drawing, if necessary plan showing all supply lines
- Material list
- Delivery note, packing lists
- DIS unloading guideline for delivery via sea containers
- General terms of sale and delivery of Schletter Solar GmbH
- Regulations for accident prevention and environmental protection
- if necessary, work and operating instructions of the operator / the operating site.

2. TRANSPORT, LOADING AND UNLOADING

WARNUNG

- Always wear your personal protective equipment (safety shoes, safety helmet, safety glasses, protective gloves and safety vest) while loading or transporting FS Duo components on the construction site. (See section 1.5. Safety Instructions).
- Furthermore, wear the personal protective equipment specified in your factory regulations for the specific task.
- The monitoring of the entire unloading process is mandatory.
- Never step below lifted loads.
- Make sure that there are no unauthorized persons in the danger zone.
- Only use certified and undamaged lifting- and auxiliary equipment.

Make sure to observe all country-specific regulations and standards of the destination country as well as your work instructions!

2.1 Delivery of the components

The components for FS Duo are delivered with a suitable vehicle, e.g.

- lorries (trucks) or
- overseas containers (observe DIS unloading guideline)

2.2 Preparation of delivery

- Prepare a solid and passable surface for the delivery.
- Ensure that all access roads, manoeuvering areas and unloading areas are accessible for trucks (up to 40 tons) and can be used by forklifts and lifting equipment.
- Only provide qualified technical personnel for the loading and transport works.

2.3 Providing forklifts and lifting equipment

- Organise appropriate forklifts and lifting equipment for the delivery date.
- Choose suitable forklifts and lifting equipment in consultation with the responsible site management.
- Make sure that the components, pallets and long items can be unloaded duly.
- Provide forklifts and lifting equipment with different fork spacing or with adjustable forks.
- Please observe the DIS unloading guideline!

2.4 Inspection of the scope of delivery

The following accompanying documents must be checked upon delivery:

- delivery note
- packing lists

We recommend that you pay attention to the following points at receipt of the goods:

- Visual inspection of the delivered material
- Verification of conformity with the supply contract
- Delivered quantity / comparison with packing lists and delivery note
- General condition of the material
- Damage to the delivery
- Delivery documents

Warranty claims of the customer presuppose that he has complied with his obligations of examination and notification of defects according to §§ 377, 381 HGBIn the event that a defect is discovered during the incoming goods inspection or later, this must be reported to Schletter Solar GmbH immediately in writing. The report is considered as immediate if it is made within two weeks, the timely dispatch of the report being sufficient to meet the deadline. Regardless of this obligation to inspect and give notice of defects, the customer must report any obvious defects (including false and incomplete deliveries) in writing within two weeks of delivery, the timely dispatch of the report also being sufficient to meet the deadline. There is no general right of return.

Excerpt from the general sales and delivery conditions of Schletter Solar GmbH - available for download on https://schletter-group.com/downloads/?lang=en

2.5 Storage of the components

The components are partly delivered in cardboard boxes on pallets. Among the components there are breakable and fragile parts.Laden Sie die Komponenten nur auf festem und tragfähigem Untergrund ab.

- Only unload the components on solid and stable ground.
- Protect all sensitive components from rain, snow, humidity and other weather influences.
- Store all sensitive components in dry and well-ventilated storage facilities or tents.
- Never store the sensitive components outdoors or covered only with a foil.
  Thereby you prevent damage before installation.

3. TECHNICAL SPECIFICATIONS

3.1 System designation and specifications

System designation	■ FS Duo - two-support steel system for open areas
Material	■ Foundation posts: steel, continuously hot-dip coated according to DIN EN 10327 ■ Girders/ Purlins: Steel coated with zinc magnesium alloy, alternatively continuously hot-dip coated according to DIN EN 10327 ■ Rafters: Aluminium / steel ■ Module clamps: Aluminium ■ Fasteners and screws: Steel, zinc flake coated or stainless steel ■ Structural analysis of the terrain based on an external soil expertise
Structural dimensioning	■ Individual system structural analysis based on regional data and guidelines. ■ Load assumptions according to DIN EN 1991-1 part 3 & 4, DIN EN 1990, DIN EN 1999, DIN EN 1993 and further or corresponding national standards. ■ Verification of all structural components on the basis of FEM calculations or verification according to structural test setup.
Characteristics of the design	■ Quick and easy mounting ■ Highly efficient and material-economic profile geometries ■ Available in individual parts or, upon request, maximally pre-assembled
Delivery and service	■ Individual structural analysis based on regional data ■ Supply of the structural components ■ Delivery of structural components or pick-up from manufacturing facility
Module types	■ Framed modules with a frame height between 30 mm and 50 mm ■ Frameless modules upon request

3.2 Mounting Tolerances

The FS Duo is always explicitly designed for the wind and snow loads of the specific location. In favour of economic efficiency, the subcomponents are typically utilised to their maximum load-bearing capacity. Thus the mounting racks must be installed with high precisionIn case of significant deviations from the assembly plans, static overstressing and can occur. For these and their consequences, Schletter Solar GmbH does not assume any liability. Therefore, compliance with the tolerances listed below is essential for the structural safety of the rack.

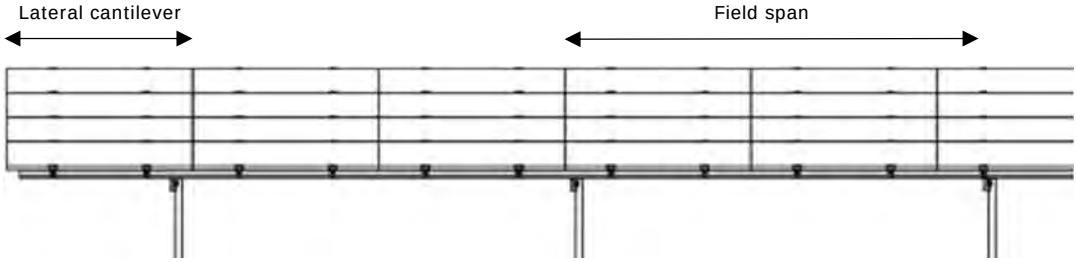

Embedment depth of the foundation post	± 100 mm
Field span	± 100 mm
Lateral cantilever	± 100 mm
Lower girder connection	± 100 mm
Upper girder connection	± 100 mm

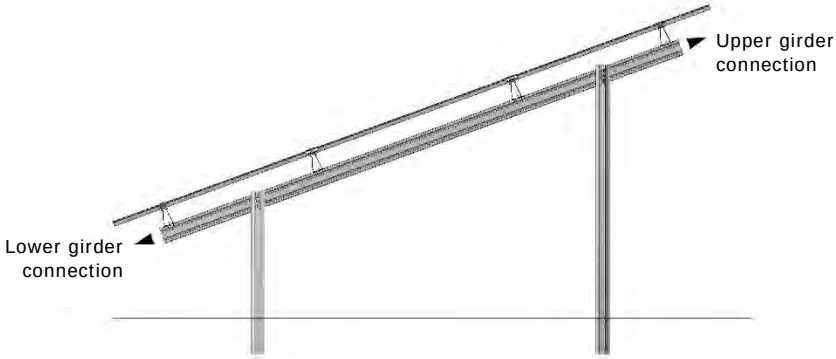

4. SYSTEM OVERVIEW

According to the requirements, the system can be designed in different variations. For portrait mounting with a girder-purlin construction on the one hand and with additional rafters for landscape mounting on the other.

4.1 System overview for system with portrait module arrangement and combined clamping

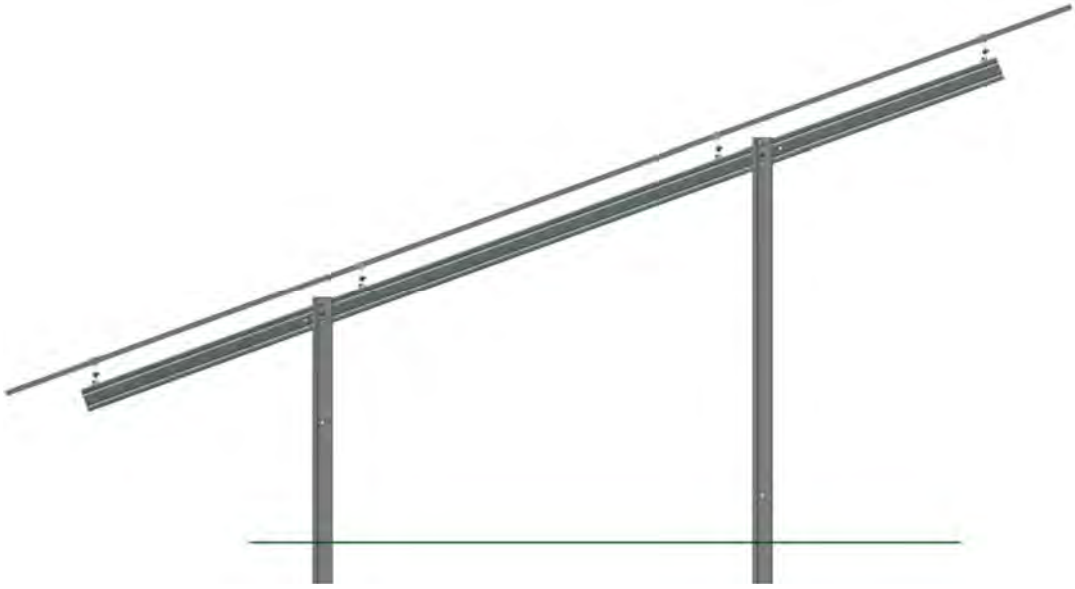

4.1.1 Components

① Foundation post
② Hexagon head screw M12x30
③ FS girder
④ FS UNO/DUO connector purlin-girder
⑤ Hexagon head screw M10x50
⑥ Purlin LC/LT/Zeta

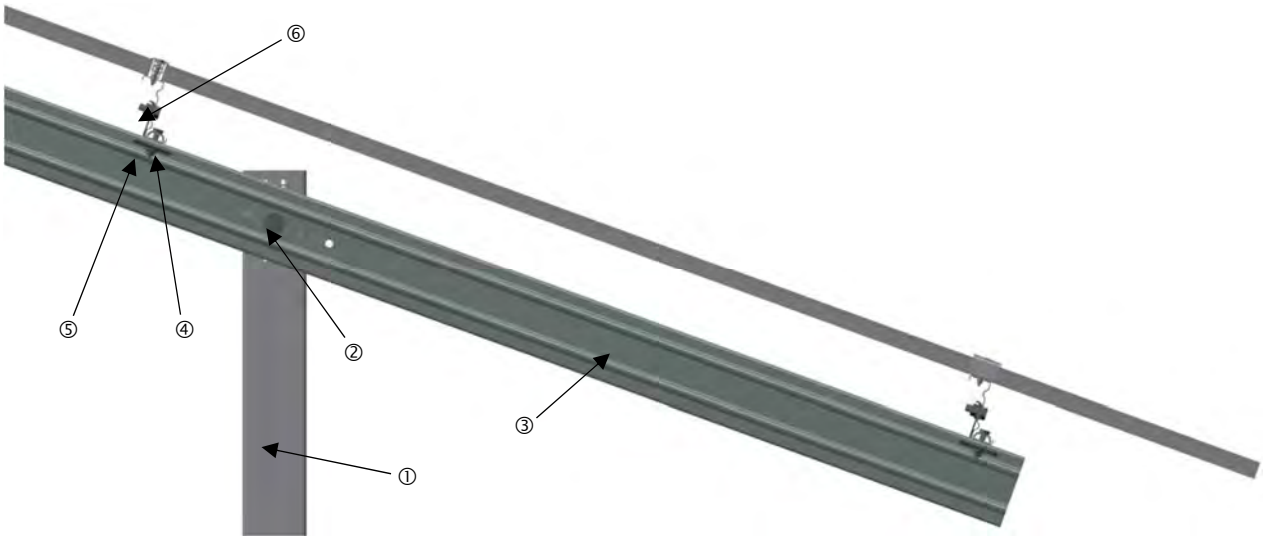

4.2 System overview for system with portrait module arrangement and quarter-point clamping

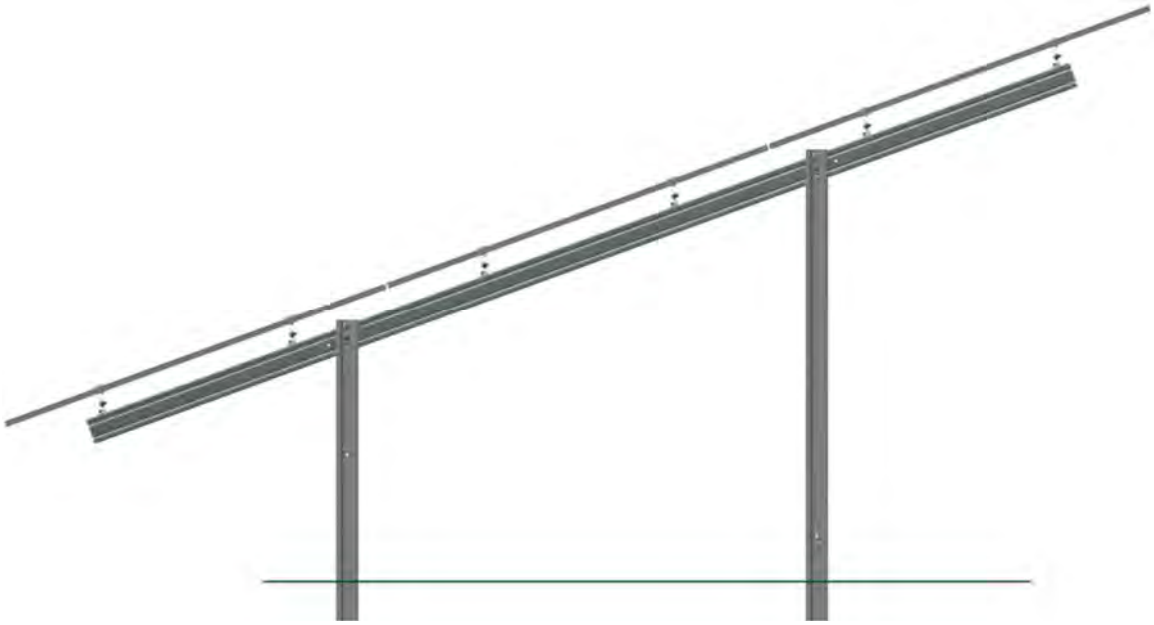

4.2.1 Components

① Foundation post
② Hexagon head screw M12x30
③ FS girder
④ FS UNO/DUO connector purlin-girder
⑤ Hexagon head screw M10x50
⑥ Purlin LC/LT/Zeta

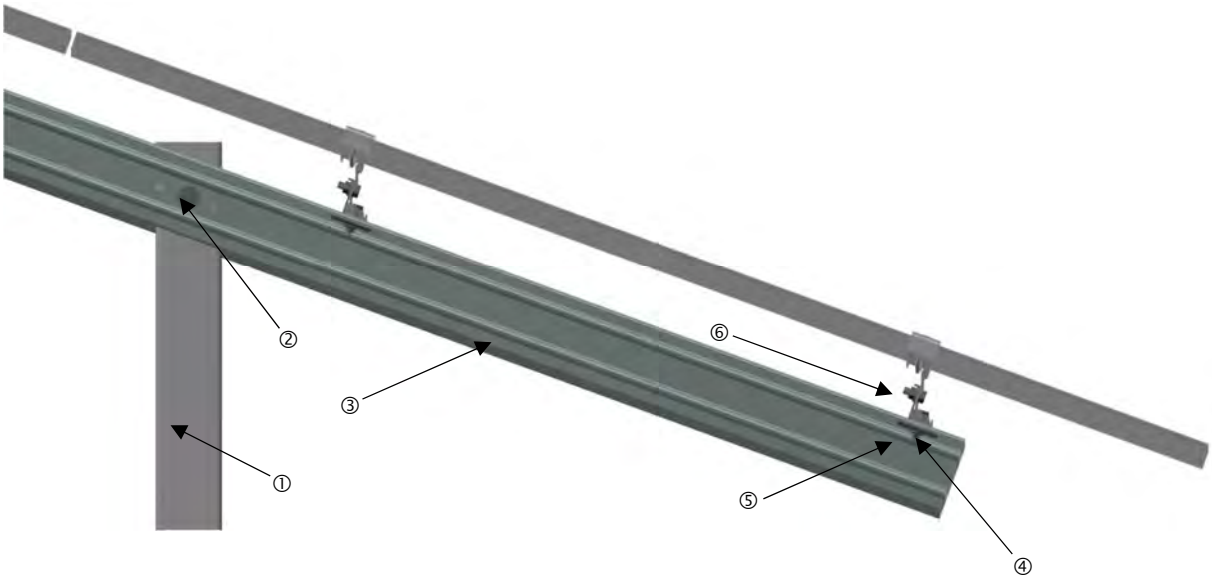

4.3 System overview for system with landscape module arrangement and rafters with module clamp

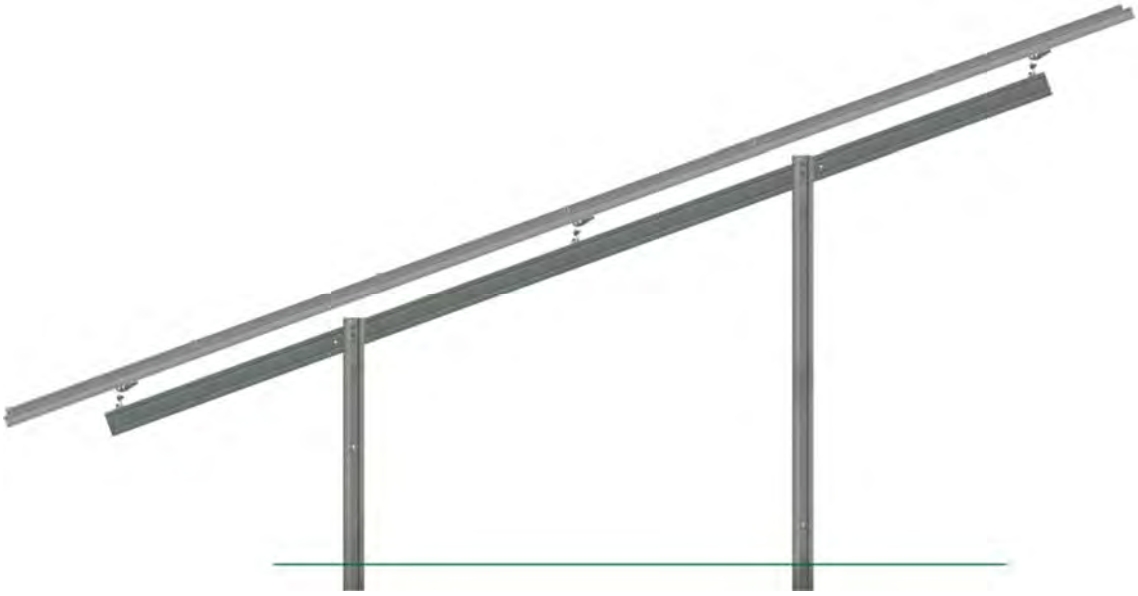

4.3.1 Components

① Foundation post
② Hexagon head screw M12x30
③ FS girder
④ FS UNO/DUO connector purlin-girder
⑤ Hexagon head screw M10x50
⑥ Purlin LC/LT/Zeta
⑦ FS Uno/Duo purlin claw
⑧ Screw M10x25 square
⑨ Module bearing rail aluminium/steel

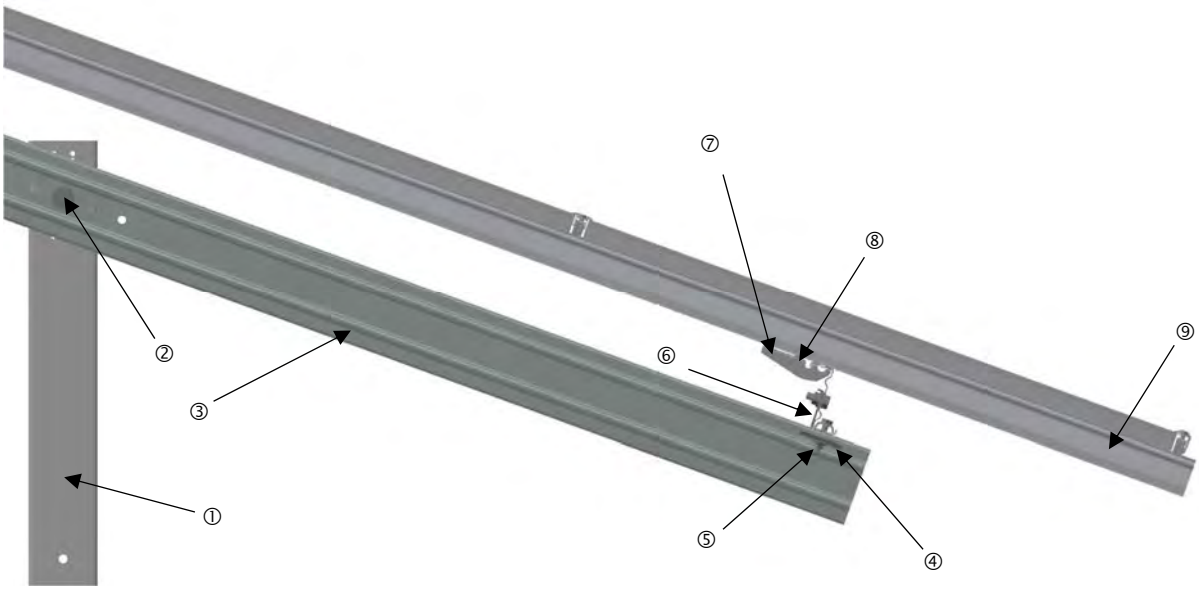

5. COMPONENT OVERVIEW

ARTICLE NUMBER	ITEM NAME
GIRDER-PURLIN CONNECTOR	
144999-086	FS UNO/DUO connector purlin LC Girder
144999-088	FS UNO/DUO connector purlin-girder galv
PURLIN RAFTER CONNECTION	
144999-083	FS Uno/Duo purlin claw
MODULE CLAMPS	
131121-002	Middle clamp Rapid16 40 – 50
131101-002	End clamp Rapid16 40 - 50
131121-001	Middle clamp Rapid16 30 - 40
131101-001	End clamp Rapid16 30 - 40
131101-003	End clamp Rapid16 H 30 - 40
131121-112	Middle clamp Rapid16 40 – 50 L
131121-111	Middle clamp Rapid16 30 - 40 L
131101-101	End clamp Rapid16 30 - 40 L
131101-102	End clamp Rapid16 40 - 50 L
131101-103	End clamp Rapid16 H 30 - 40 L
139004-000	Bearing plate for middle clamp Eco
CLAMP ADAPTERS	
000014-680	Modul clamp adapter Zeta
144919-060	Module clamp adapter 60 mm Zeta
144919-054	Modul clamp adapter LC/LT
144919-052	Module clamp adapter 60 mm LC/LT
943755-925	Self-tapping screw 5.5x25 A2 with seal. washer
RAFTER	
120012-111	Mod. bear. rail R1 - project length
120013-111	Mod. bear. rail R2 - project length
120014-111	Mod. bear. rail R3 - project length
144502-111	C-Rafter

PURLIN	
144901-001	FS Uno/FS Duo purlin 5 project length
144901-017	FS Purlin LC90SH project length
144901-018	FS Purlin LT100SH project length
000014-577	FS Uno/FS Duo purlin connector Galv. Gen2
144999-085	FS Purlin Connector LT/LC
GIRDER	
144099-009	FS Girder SH P1 project length
FOUNDATION POSTS	
143006-200	Steel foundation post SRF6 cust. Size
143007-200	Steel foundation post SRF7 cust. Size
143012-010	Foundation post SRF6 extens.L1000mm galv
143012-020	Foundation post SRF7 extens.L1000mm galv
SMALL MATERIAL	
942000-880	Nut M10 hexagon ISO 4032 ZFC
942000-881	Nut M12 hexagon ISO 4032 ZFC
942000-872	Flat washer M10 ISO 7089 200HV zfc
942000-873	Flat washer M12 ISO 7089 200HV zfc
942000-874	Screw M10x30 hexagon ISO 4017 st.8.8 zfc
942610-050	Screw M10x50 hexagon ISO4017 8.8 ZFC
942000-882	Screw M12x30 hex. DIN933 8.8 zfc
943912-010	M10 Flange nut serrated DIN6923 A4
943912-012	M12 Flange Nut serrated DIN6923 A4
943922-010	M10 Large Washer DIN9021 A2
943922-012	M12 Large Washer DIN9021 A2
943410-025	Screw M10x25 square A2 GMB
943610-030	Bolt M10x30 hexagonal DIN933 A2 GMB
943610-050	M10x50 Hexagon head bolt DIN933 A2 GMX
943612-030	Anti-Seize Coated M12x30 Bolt DIN933 A2
000016-673	FS steel locking plate
964000-176	Paint zinc dust silver gray satin-gloss
149023-001	Fastening retainer 1.0-3.0mm upper guide (Zeta purlin)
129012-011	FSAS Cable clip (Zeta/Eta Purlin)
144504-012	FSAS Cable clip (LC/LT)
144504-015	FS-Gen3 SRF6 Tilt Head
144504-016	FS-Gen3 SRF7 Tilt Head

6. ASSEMBLY INSTRUCTIONS

The FS Duo is planned individually for the specific location. The following information is required already in the planning stage:

- Property lines
- Rights of way, the property must be accessible at any time
- Obstacles in the building ground (pipelines, underground cables, etc.)
- Weather conditions (wind, rain, snow, etc.)
- Conditions that may have an impact on the building ground (seismic events, risk of erosion, etc.)
- Geotechnical reports on the topology of the site and the soil composition

For the mounting of the racks we recommend

- to keep a clear and detailed site report in which all daily work steps, personnel deployment and assembled material are recorded.
- to carefully compare the delivery notes with the delivered material on the construction site

6.1 Building ground

Consider the admissible ground slope already at the planning stage of the ground mount system. The following guide values provide the basis for the structural safety of the system:

Maximum admissible ground slope east-west: **10°**

Maximum admissible ground slope north-south: **35°**

(depending on the slope properties, soil composition, rocks, etc.)

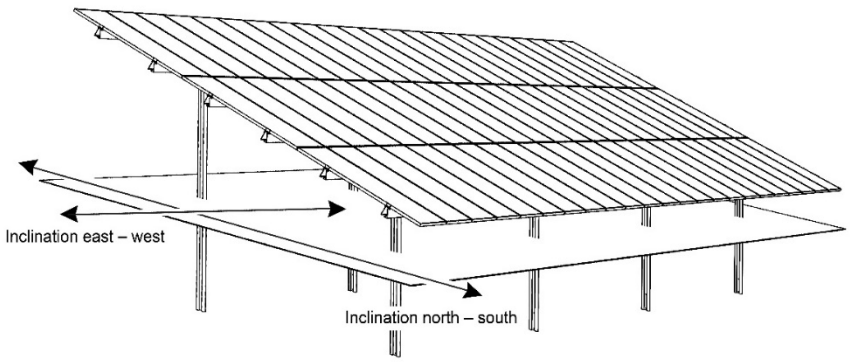

The Schletter mounting systems do not follow the terrain topography within one rack. Height differences of the ground within one rack can be compensated by the foundation posts. Therefore, align the foundation posts with a cord regarding their height already at the pile-driving operations. The tolerance of the embedment depth is **± 100** mm.

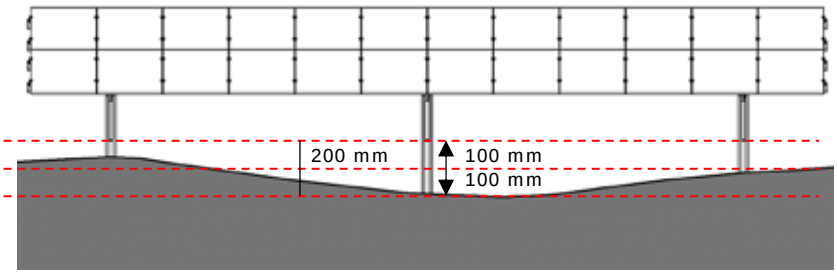

7. FOUNDATION

7.1 Verification of the GPS-Points

A verification of the measuring points is of particular importance on very uneven terrain. If the measuring points have been determined with the help of GPS devices, the foundation posts can often be offset in a north-south direction. This can make the rack mounting more difficult.

Therefore, check the GPS points with try square and cord, as shown in the following diagram, before starting the pile driving

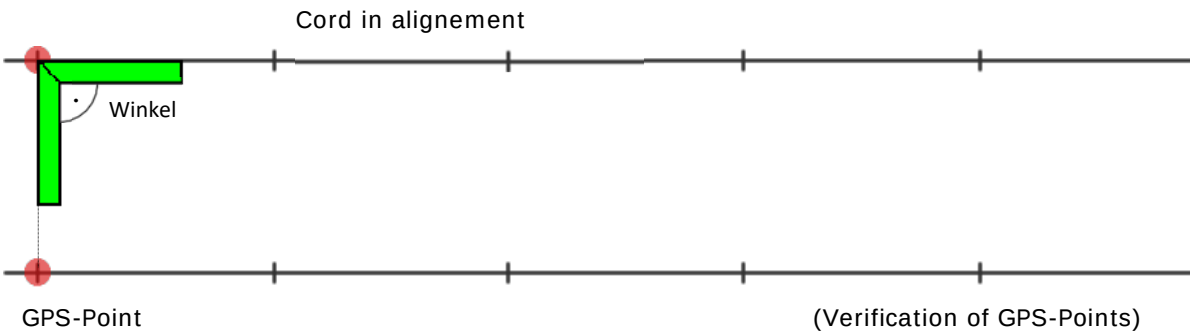

7.2 Pile-driving tolerances

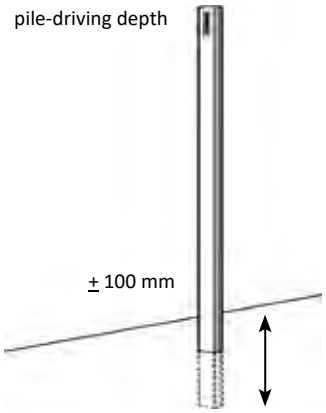

(pile-driving tolerances - depth)

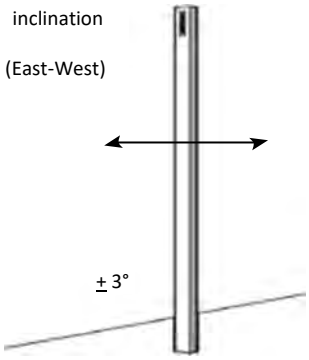

(pile-driving tolerances - inclination E/W)

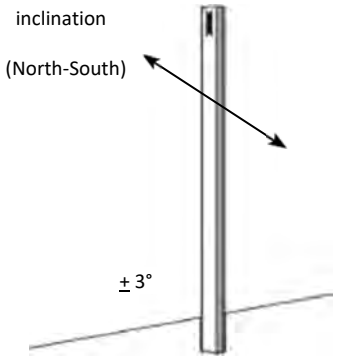

(pile-driving tolerances - inclination N/S)

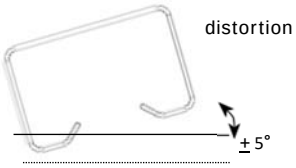

(pile-driving tolerances - distortion)

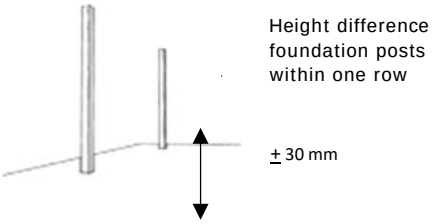

(pile-driving tolerances – height diference)

The pile driving operations must be carried out by specialized contractors. Using a digital terrain model with contour line data, special pile-driving plans are generated. These have to be provided at least one week before the beginning of the pile-driving work. In these plans the position of the posts must be indicated and dimensioned accordingly. Furthermore, the first and last post of each row must be marked by a wooden stake in the terrain. For rows with lengths exceeding 50 metres, markings (wooden stakes) are also required within the rows.

7.3 Pile-driving obstacles and concrete-embedding of the posts

Peculiar foundation posts must be clearly identified and marked in a pile-driving plan. Irregularities during the pile-driving process which may impair pile grip (e.g. inclined position, decrease followed by a sudden increase in pile penetration speed, rapid penetration speed of the foundation during pile-driving, etc.) have to be noted. Any measures for the pile-driving of the foundations that deviate from the specifications have to be coordinated with Schletter Solar GmbH.

If unexpected pile-driving obstacles (blocks, solid rocks) block the pile-driving, proceed as follows:

1. Pre-drill to the intended driving depth
2. If possible remove the drill cuttings by suction. Otherwise, compaction of the drill cuttings in the drill hole.
3. Fill the drill hole in layers with tamped concrete of quality C20/25 and compact it.
4. Then pile the foundation immediately.

7.4 Tools

In the following, the tools that are normally required for the assembly of the FS Duo are listed. Additional tools, which are required for specific cases (e.g. concrete-embedding of the posts etc.), are not included.

CAUTION
Only use the recommended tools for the mounting of FS Duo. The use of improper tools can cause damage to the rack, which can threaten the structural safety of the system!

We recommend to use torque wrenches for all screw connections. Rapid rotational movements increase the risk of a "seizure" of the screw.

7.5 Positioning and staking of the foundation posts

- measuring tapes (100 m)
- line pins (ca. 20 pcs.)
- mason´s lacing cord
- sledge hammer
- wooden stakes
- color spray (for ground marking etc.)
- water-insoluble felt pen
- angle meter

7.6 Pile driving

- Pile driver with suitable impact piece
- Spirit level
- Laser if required
- Zinc dust primer or ZM repair paint
- Brush for zinc dust primer

7.7 Rack Mounting

- torque wrench (30 Nm to 70 Nm)
- wrench socket size 15-19
- combination wrench size 15 – 19
- hammer
- plastic tip hammer
- angle meter - spirit level
- mason´s lacing cord
- cordless screwdriver
- measuring tape
- zinc dust primer or ZM repair paint
- brush for zinc dust primer

7.8 Module mounting

- mason´s lacing cord
- measuring tape
- cordless screwdriver
- if necessary, spacers for distance between the modules
- 40TX-wrench
- torque wrench (< 15 Nm)
- 40TX-bit for torque wrench

7.9 Torque specifications

Stainles Steel

Screw type	Component	Tightening torque
M8	Connection: module clamp+purlin	15 Nm
M10	Connection: girder+purlin, purlin+rafter	32 Nm
M12	Connection: pile+girder	56 Nm

Zinc flake

Screw type	Component	Tightening torque
M10	Connection: girder+purlin, purlin+rafter	32 Nm
M12	Connection: pile+girder	93 Nm

CAUTION
Wherever possible, screw connections must be tightened from the bolt head side! In contrast bolt connections which are installed without interlocking securing elements, e.g. without nuts with underhead serration, must be tightened from the nut side by default. At the inspection of the pretensioning of the bolts, it should be considered that clamping force losses occur due to restraint and friction effects. These are taken into account in the determination of the tightening torque. At the inspection of the screw joint, it may not loosen with a torque of 50% of the scheduled tightening torque.

8. INSTALLATION STEPS

8.1 Pile driving and application of corrosion protection

WARNING

- Wear suitable protective equipment, especially ear protection and protective gloves, high-visibility vest and safety shoes during the pile driving! Always keep visual contact with the ramming device and the working area.
- Pay particular attention to mechanically moved parts in the danger area of the pile driving device to avoid crushing injuries!
- Avoid an overturning of the pile driving machine by only driving on passable soil!

Check the pile-driven foundations for firm grip in the ground!

Only a special paint (zinc dust primer) provides the necessary protection and is admitted according to the standard. Simple zinc paint sprays do not provide any long-term protection.

The indicated tolerances may not be exceeded!

1. Pile-drive foundation post according to the specified tolerances.

Height tolerance between the posts: ± ***30 mm***

Tolerance of post inclination N-S and O-W: ± ***3°***

Tolerance of the pile-driving depth in the course of the terrain: ± ***100 mm***

1.

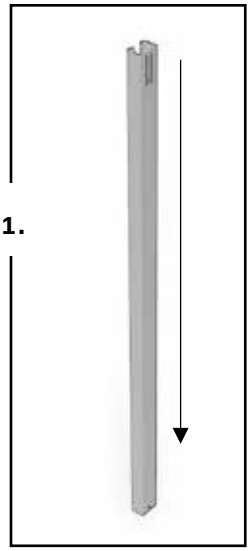

2.

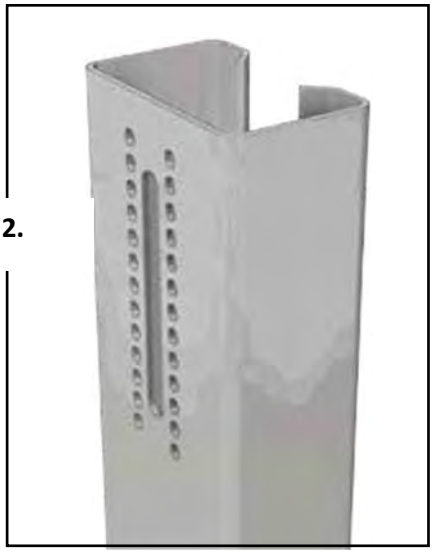

2. Paint the upper end of the foundation post inside and outside with zinc dust primer on a length of at least 30 mm.

If a larger surface of the zinc coating has been damaged by the pile-driving or other influences, the corrosion protection in these areas must be additionally repaired with zinc dust primer (simple zinc paint sprays are not admissible) (e.g. Art. No. 964000-176 colour zinc dust silver grey satin-gloss or equivalent).

3. The girder- and purlin edges are not coated. However due to the self-healing effect of the ZM coating, there is no need to paint them. There might occur some dark or brown spots however they will not lead to corrosion issues.

Please refer to the pile-driving plan for the exact positioning of the foundation posts.

4. Check the alignment of the foundation posts with one another and make sure that the foundation posts have the correct dimensional tolerances (see point 5.1. - 1st step). For the alignment of the opening of the foundation posts, please refer to the pile-driving plan provided by Schletter.

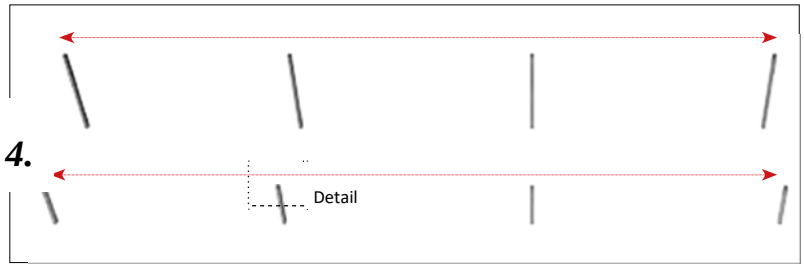

8.2 FS Hybrid – Concrete rings

On some sites the ramming is not allowed or possible under a certain depth, (this is for example the case for landfill area with waste covered by a few decimetres earth or on some old carrier with a superficial earth cover on top of hard rocks). In this case we orient yourself toward an FS-Hybrid system. This is the same thing as an Fs-Duo system, but an additional fibre reinforced concrete ring shall be installed around the pile. In case you are installing an FS-hybrid system here are the additional step to follow.

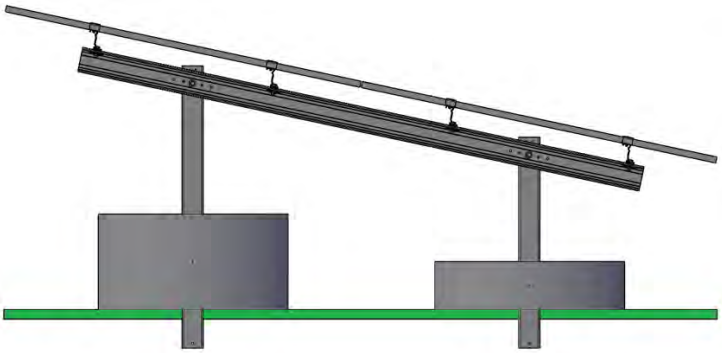

1. Follow step 1 to 4 of the chapter *8.1 Pile driving and application of corrosion protection* to ram the pile to the desired depth according to the table drawings (usually between 20 and 60cm) and protect them against the corrosion.

2. To solidarize the pile with the concrete ring a steel bar M10 50cm long shall be installed trough the pile at mid height of the concrete ring (this bar is not furnished by Schletter). Pass the steel bar trough the hole prepared for this purpose in the pile.

3. To prevent damage due to frost and temperature difference we recommend installing a gravel bed (5-10cm thick) around the pile. Install the mould or the concrete precast ring (not furnished by Schletter) around the pile according to the drawings. Pour the fibre concrete up to the requested height according to the table drawings, this shall be minimum C25/30 concrete with minimum 10kg/m3 steel fibre (acting as reinforcement) or according to our drawing specification.

If a different concrete or reinforcement is chosen Schletter will ensure no warranty on it. Calculation and warranty shall be given by the supplier.

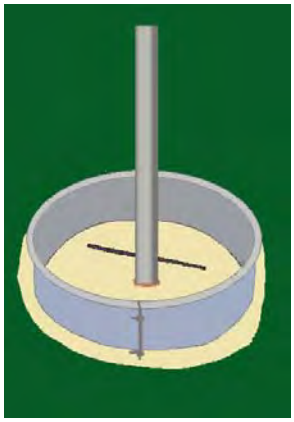

4. Vibrate the concrete to ensure there is no air cavity in it and it is homogeneous and compacted correctly. To ensure water outlet, create an inclined surface on top of the concrete rings (3° to 5°), the purpose is to prevent any water stagnation on top of the ring and at the pile base. Let the concrete dry according to concrete manufacturer recommendation but at least 48 hours before removing the mould and install the girder on the piles.

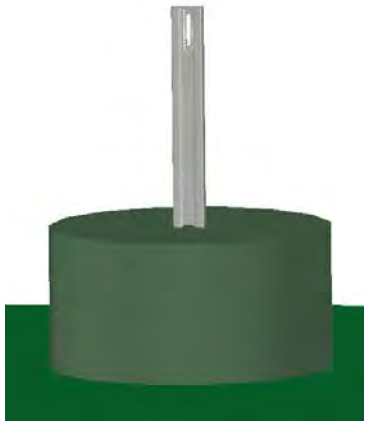

5. To protect the pile even better against corrosion you might seal the spot where the piles come out of the concrete with bitumen glue. The glue shall cover the whole surface of the pile (inner and outer side) to a total of about 5cm.

8.3 Pile extension

In case there is an issue with to short piles, an additional extension can be mounted, in order to Reach the necessary total length. The total length of the extension is 985mm, the adjustment Steps are 50mm.

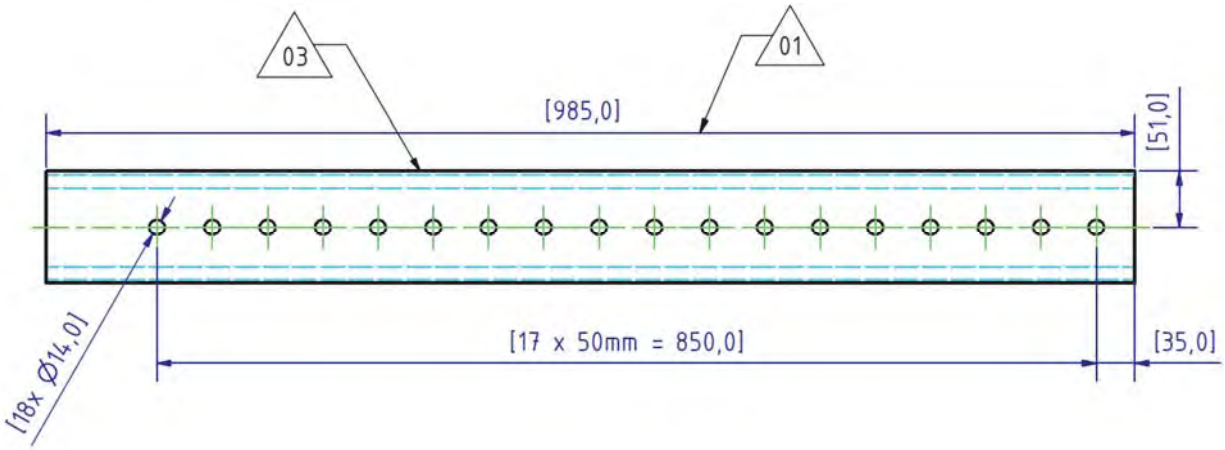

The extension will be shifted into the pile. The connection will be screwed with two M12x30 screws and two fastening plates.

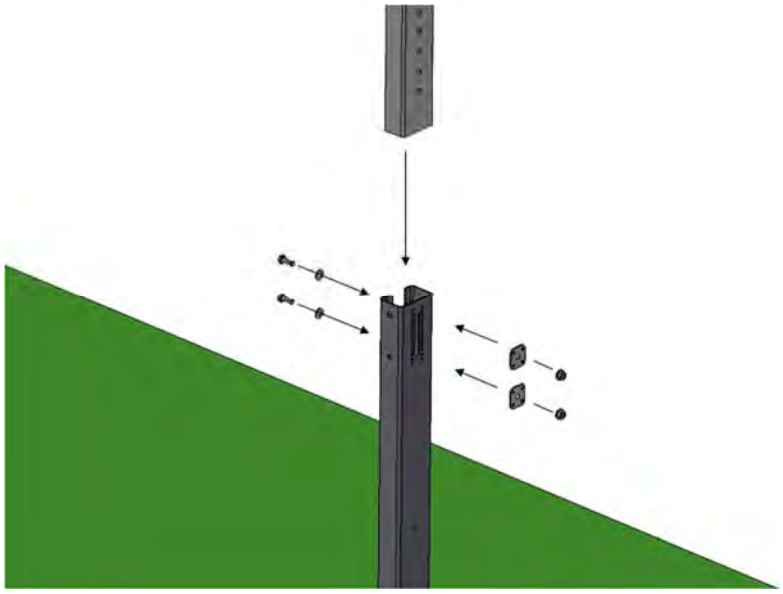

After adjusting the height, the screws need to be tightened according to the torque Specification.

9. RACK MOUNTING - GIRDERS & PURLINS

9.1 Fastening of the girders on the foundation posts.

CAUTION

- Wear suitable protective equipment for the installation of the beams.
- Secure the parts to be fixed against sliding!
- Maintain a clean working area to avoid falling!
- Secure tools against falling down!

- The beam is height-adjustable by 99 mm.
- Generally the screw can be fastened in any of the 4 holes of the beam. The holes only serve for exact adjustment.

The girders are placed laterally along the foundation post and are secured with the M12x30 screws. The locking plate is inserted into the inner side of the foundation rail and must snap into the side holes of the slotted hole with all 4 lugs. The flange nut must be positioned on the locking plate, the washer in the girder. First adjust the girder to the lower side. Align the height of the girder with the ground and the cantilever of the girder with the foundation post. Then tighten the front screw according to the torque specification. Use the angle spirit level to adjust the inclination of the girder according to the technical drawing, then tighten also the rear screw on the foundation post according to the torque Specification.

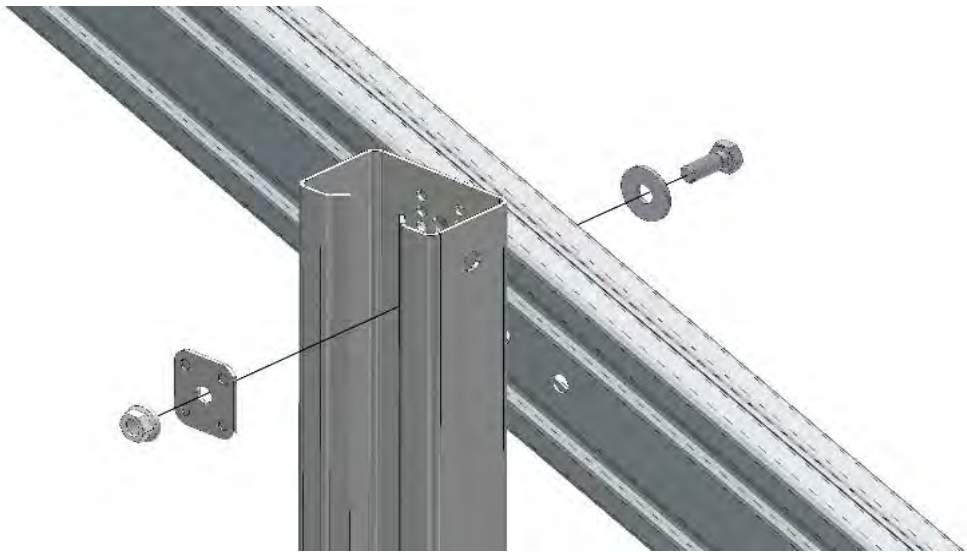

9.1.1 Pile-Girder connection reinforcement

It might happen that the connection between the Pile and the Eta girder is much stressed, in this case a reinforcement of the connection might be necessary. If this is the case, it will be clearly stated in the static report (last page) and on the bill of material.
In such a case use the *Connection Reinforcement Girder Eta – Post* (art. Num. 144999-329) and insert it between the SRF pile and the Girder and fix the assembly with 3 bolts + nuts + washers M12x30. A locking plate is still necessary in the slotted hole of the pile (see picture below).

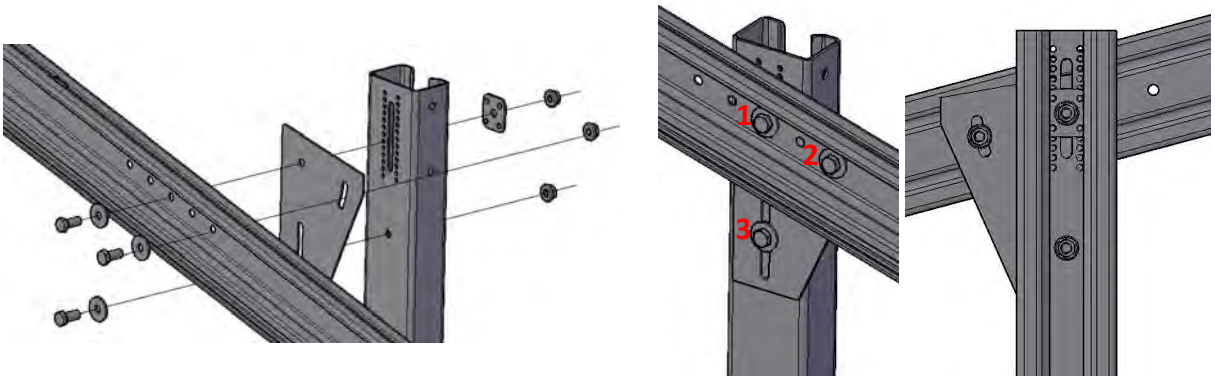

Note that the main screw (1) shall pass through one of the 5 initial holes of the girder (holes made in factory). In case this screw is fixed on one of the two down holes of the girder you might need to drill a new hole to fix the screw (2) for Connection Plate & Girder. The additional hole in the pile for screw (3) shall have been planned in production phase prepared by Schletter.

9.2 Mounting of the purlins

CAUTION

- Wear suitable protective equipment for mounting the purlins!
- Secure the parts to be fixed as long as they are not completely assembled.
- Use suitable auxiliary devices for heavy loads and ask colleagues for help!
- Maintain a clean working area to avoid falling!
- Never position yourself under suspended loads and secure objects from falling over and tools from falling down!

CAUTION
Note that the purlin must be mounted at a 90° angle to the girder assembly to ensure that the modules can be positioned correctly. In the worst case, the modules can fall down due to inaccurate mounting.

The purlin will be placed on top of the girder. The direction of the purlin can be seen on the project specific table drawings. The FS UNO/DUO connector purlin-girder will be placed in the top part of the girder and the bottom part of the purlin and connected with the Hexagon head screw M10x50. Due to the oblong slots, in the girder and the purlin, both components can be aligned according to the table drawing. After aligning them, the screw needs to be tightened according to the torque Specification.

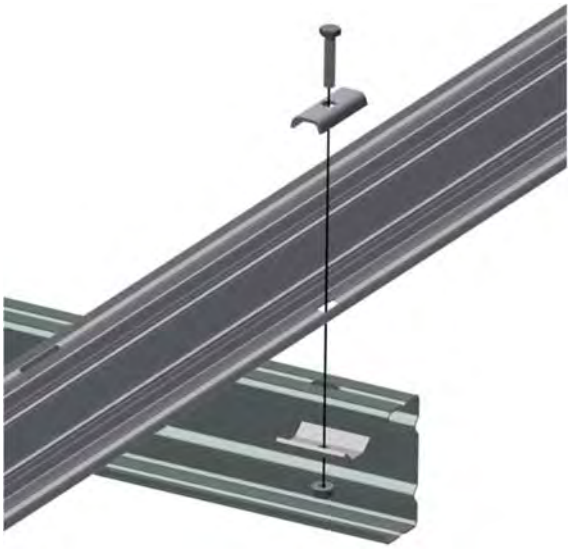

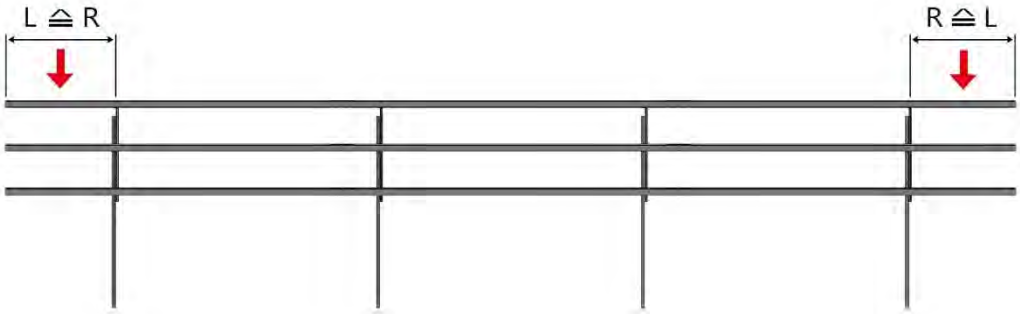

9.3 Imprint on slotted purlins

Slotted purlins are imprinted for a better assignability.

The code contains the information about the table number,

The type of the purlin, the purlin number and the purlin length.

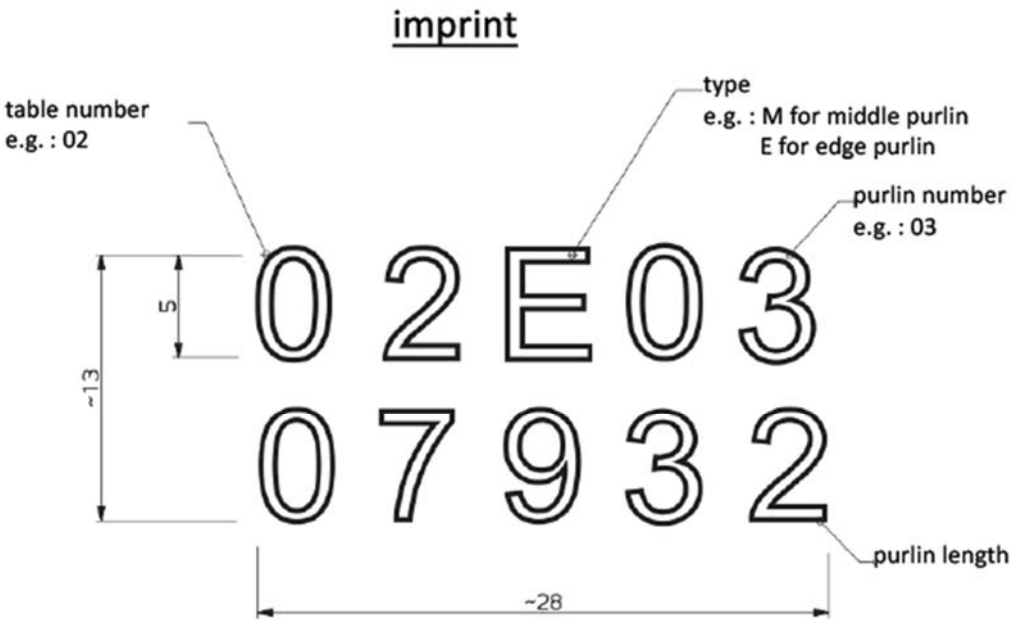

imprint		
table number	type	purlin number
02	E	03

The imprint can be found at the end of the purlin.

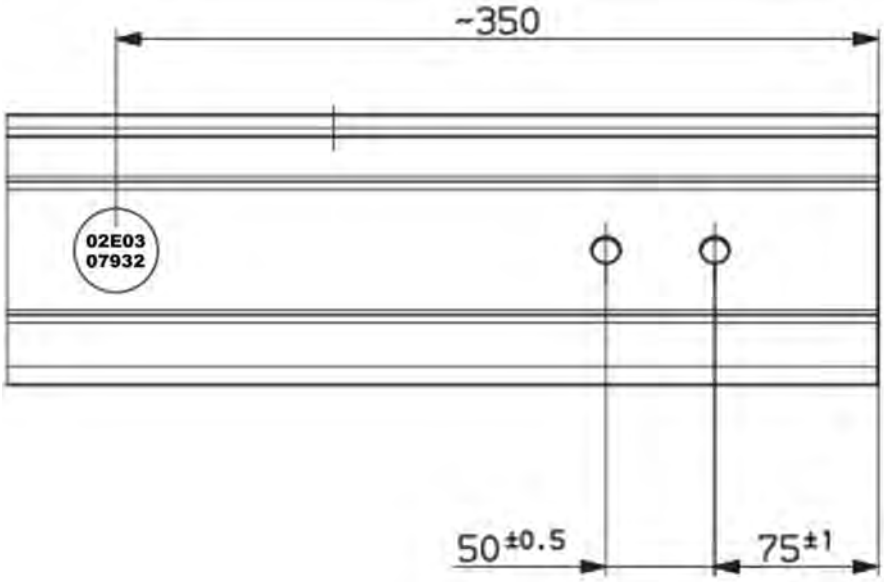

10. INSTALLING THE PURLIN CONNECTOR

The purlin connector will be placed underneath the purlins and screwed with four M12x30 bolts for Zeta purlins and four M10x30 blots for LC/LT purlins. After placing them, the screws need to be tightened according to the torque Specification.

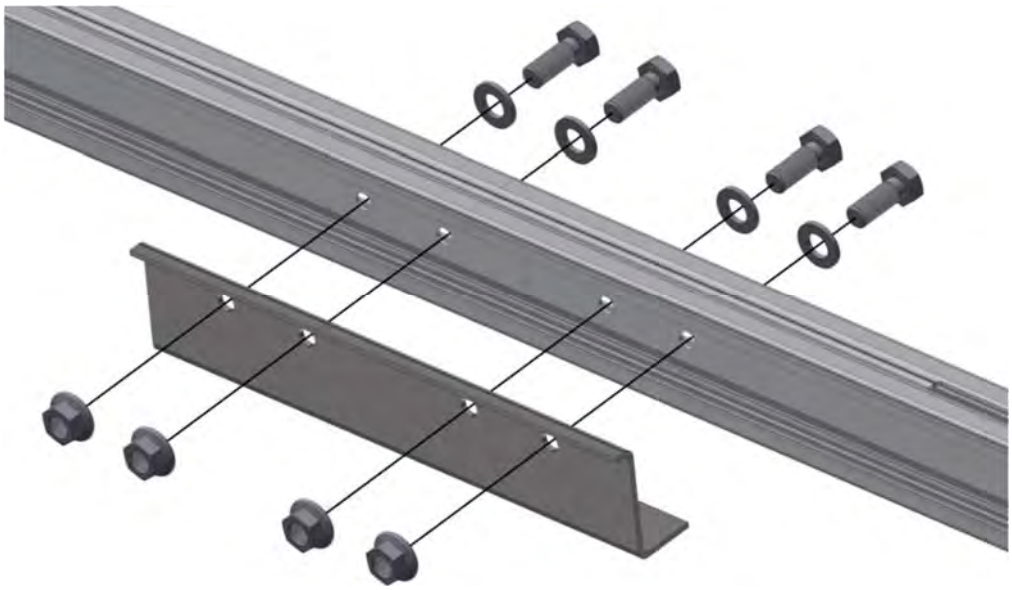

11. INSTALLING THE RAFTERS (FOR LANDSCAPE INSTALLATION)

CAUTION

- Wear suitable protective equipment for the assembly of the rafters, especially a safety helmet and safety shoes!
- Secure the parts to be fixed as long as they are not completely assembled.
- Use suitable auxiliary devices for heavy loads and ask colleagues for help!
- Maintain a clean working area to avoid falling!
- Never position yourself under suspended loads and secure objects from falling over and tools from falling down!

Insert the hexagonal M10x25 bolt into the screw channel of the rafter. The number of bolts corresponds to the number of purlins underneath.

Place the rafter on the purlin and fasten it on the mounting point, using a purlin claw and a flange nut M10 according to the torque specification.

ATTENTION
Make sure that the rafters are positioned correctly in both the east-west and the north-south directions. Inaccurate positioning may make it impossible to mount the modules.

Control the actual module dimensions before mounting the rafters and adjust the mounting positions if necessary.

12. MODULE INSTALLATION (¼ POINT LANDSCAPE INSTALLATION)

Solar modules are third party components that are not included in the scope of delivery for the FS Duo substructure. Therefore, Schletter Solar GmbH refers to the safety and installation instructions of the module manufacturer. These need to be observed for the mounting of the PV modules in addition to the instructions in this installation manual.

The following points must always be observed:

- PV modules may only be installed by qualified personnel.
- PV modules are electrical devices. They must be treated with care!
- Shocks, impacts and vibration of the modules must be prevented
- The modules must not be weighted down (be entered, have objects placed on them, etc.).
- The module surfaces must not be exposed to scratches or dirt.
- Entering the modules and/or their frames is always prohibited.
- Pulling or tearing at the module cables is not admitted. Module cables must not be kinked or clamped. The module cables' minimum bending radii must be observed.

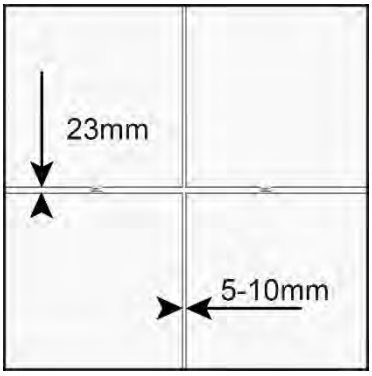

First of all, it is recommended to position the end clamps underneath the rafter. The distance from the front edge of the rafter to the inner side of the clamp should be ~50mm. Tighten the end clamp only hand-tight so that a flush alignment with a cord at the bottom side of the modules is still possible.

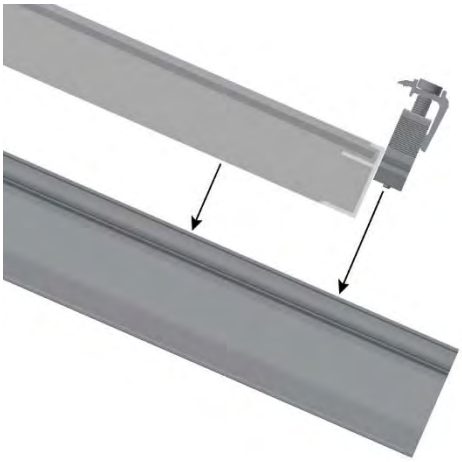

Once the bottom module row is aligned, the end clamps can be tightended to a torque of 15Nm. It is essential that the entire surface of the clamps is placed completely on the module frame.

As soon as the lowest row is fastened, the middle clamps are set. First insert all middle clamps in the rafters and tighten hand-tight so that the modules can still be aligned if necessary. Once the lateral alignment of the modules has been done, the middle clamps can also be tightened to 15 Nm torque. This has to be continued for all further module rows in the same way. When the middle clamps have all been fastened correctly, the end clamps can also be placed on the upper side of the mounting rack and fastened to a torque of 15 Nm.

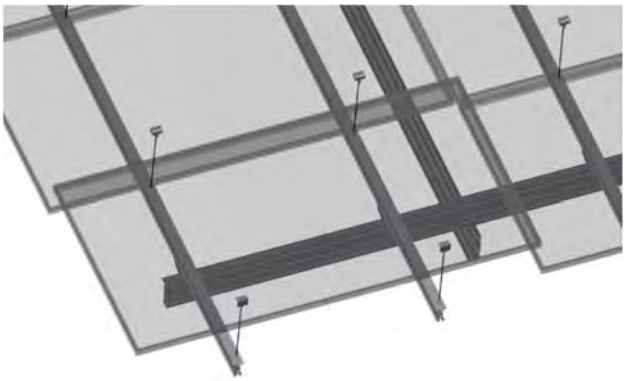

13. MODULE INSTALLATION (PORTRAIT MOUNTING)

Solar modules are third party components that are not included in the scope of delivery for the FS Duo substructure. Therefore, Schletter Solar GmbH refers to the safety and installation instructions of the module manufacturer. These need to be observed for the mounting of the PV modules in addition to the instructions in this installation manual.

The following points must always be observed:

- PV modules may only be installed by qualified personnel.
- PV modules are electrical devices. They must be treated with care!
- Shocks, impacts and vibration of the modules must be prevented
- The modules must not be weighted down (be entered, have objects placed on them, etc.).
- The module surfaces must not be exposed to scratches or dirt.
- Entering the modules and/or their frames is always prohibited.
- Pulling or tearing at the module cables is not admitted. Module cables must not be kinked or clamped. The module cables' minimum bending radii must be observed.

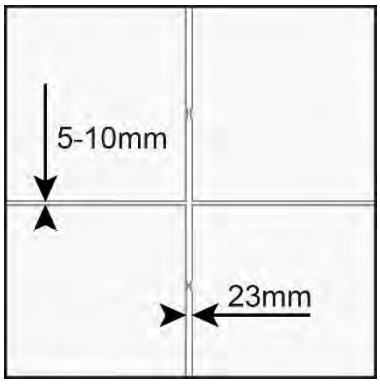

The module clamp will be placed in the slots of the Purlin. Make sure that both grooves of the claw snap Properly into place.

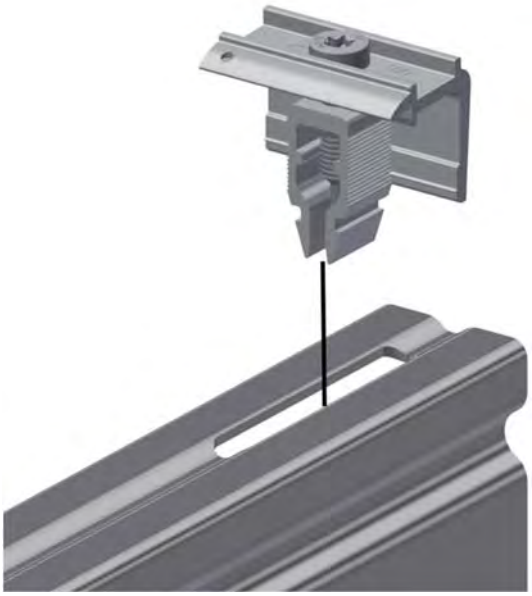

Align the cantilever of the module over the purlin according to the technical drawing. Align the lowest module row with the cord and tighten all module clamps to 15 Nm torque. Then install all other module rows above in the same way, oriented towards the lower module row.

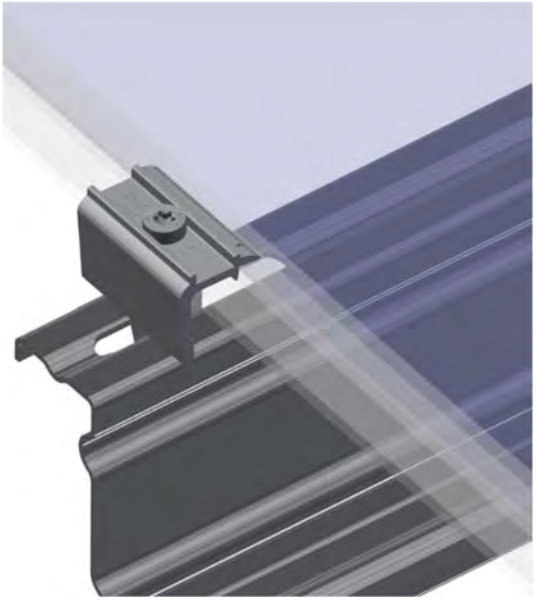

13.1 Special case combined clamping

In combined clamping, the usual 2 load-bearing rails are not installed under every module (see picture in point 4.1) The highest and the lowest purlins sit in the ¼ clamping point of the module (Detail D below), while all other purlins are installed between the module gaps. Therefore, the claw of the clamp needs to be turned 90° and will be installed horizontally (see Detail C). The clamp installation and the module installation are carried out according to the description in point 14.

Method template (all measures are examples):

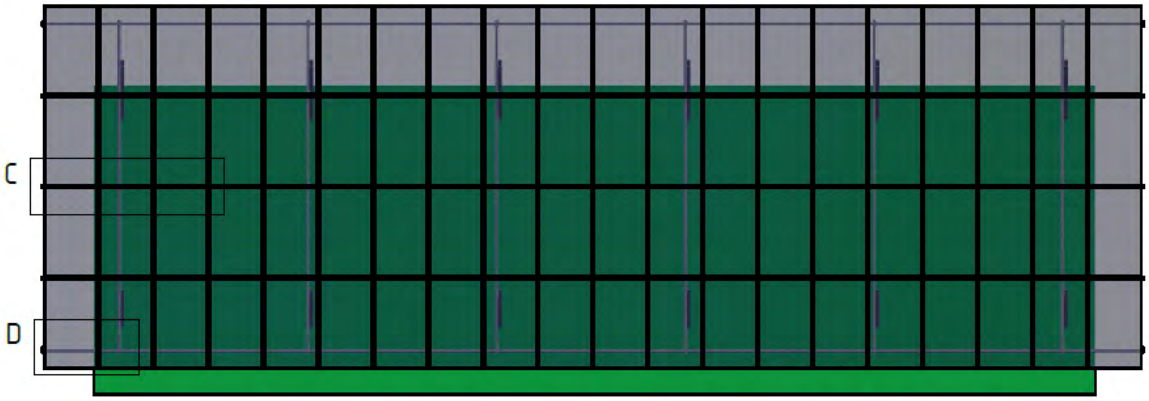

DETAIL C (1 : 20)

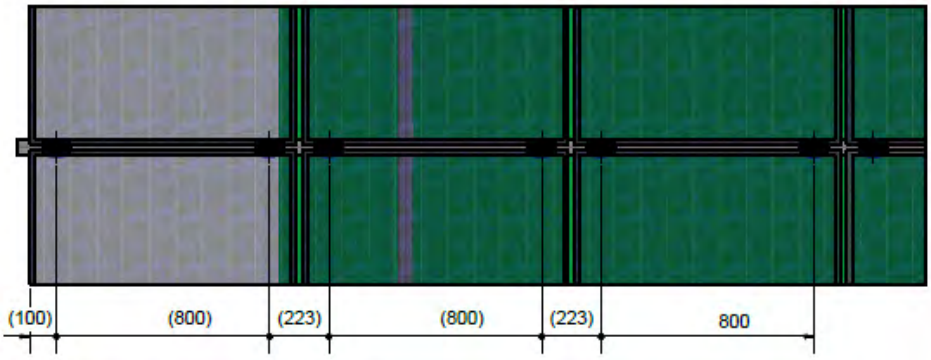

DETAIL D (1 : 20)

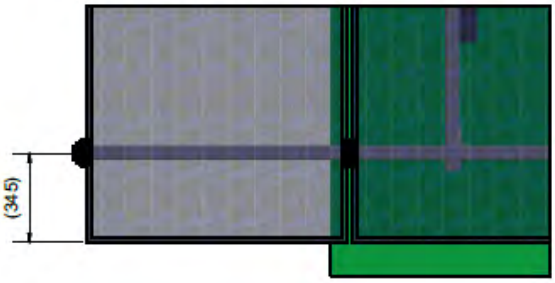

In order to increase the surface of the purlin for combined clamped modules, an additional Eco bearing plate will be installed with each module clamp.

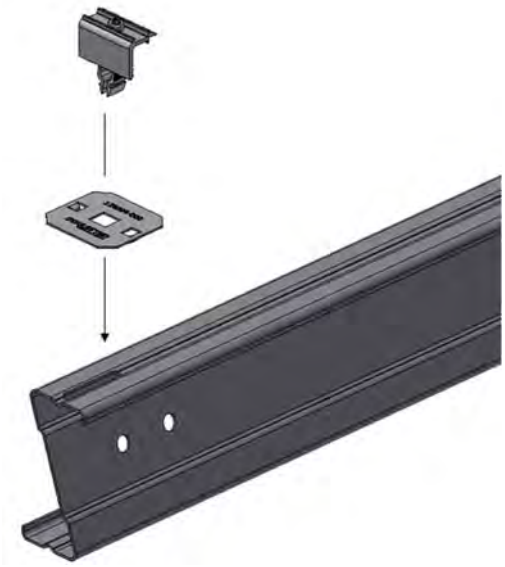

The pins of the Eco bearing plate will cover both edges of the purlin.

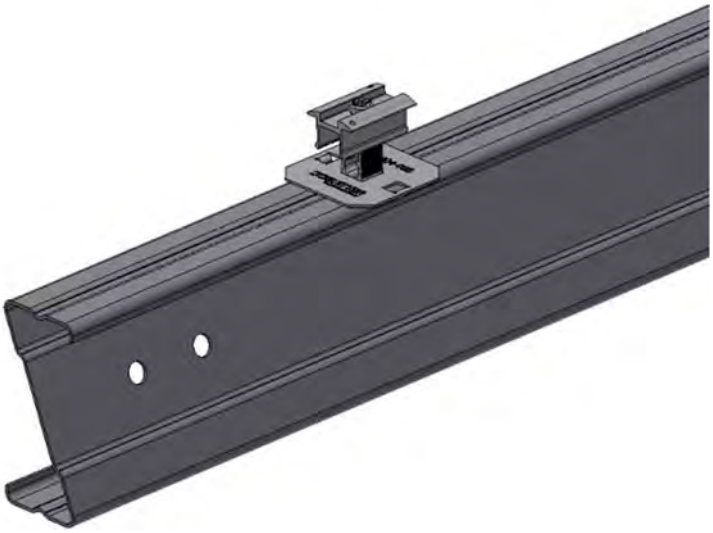

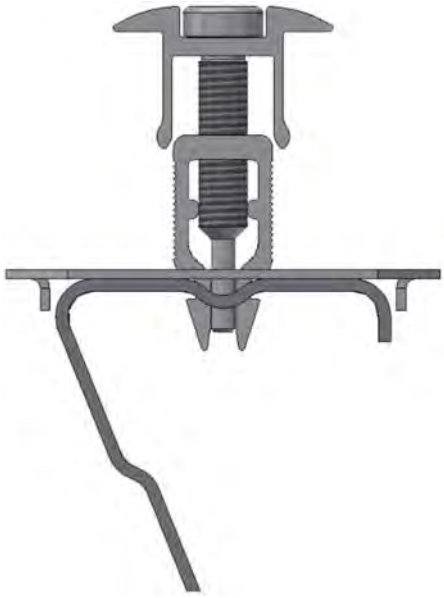

13.2 Special case adapter for bifacial modules

For bifacial modules, a special 60 mm module clamp adapter (**Pic. 4**) will be used to increase

The distance between substructure and module glass. This shall reduce back shadowing.

Please be aware, that this solution needs to be approved by the module manufacturer.

Place the adapter on the purlin (**Pic.1**). After adjusting the distance according to the

Module width, the adapter will be fixed with one self-tapping screw (**Pic. 2**).

Pic. 1

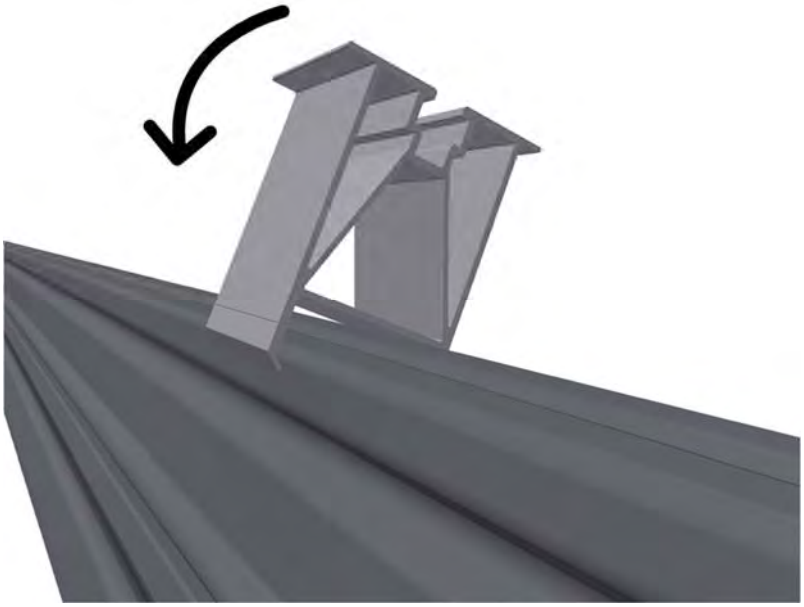

Pic. 2

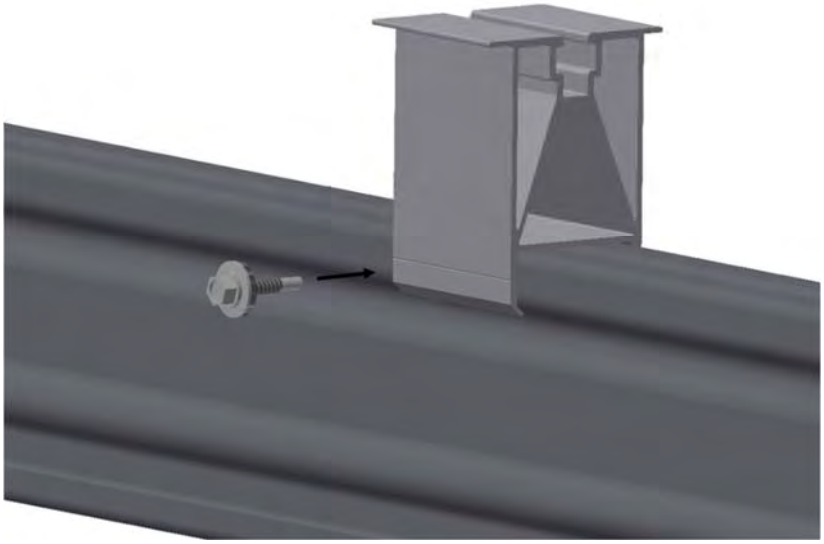

After fastening the adapter, the module clamp can be placed in the channel of the adapter (**Pic 3**). Align the cantilever of the module over the purlin according to the technical drawing. After that, tighten all module clamps according to the torque specification.

Pic. 3

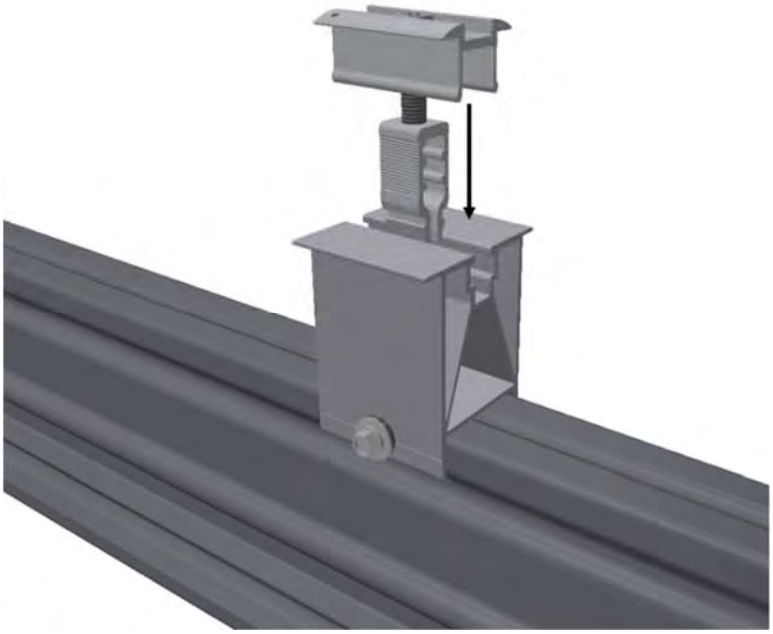

Pic. 4

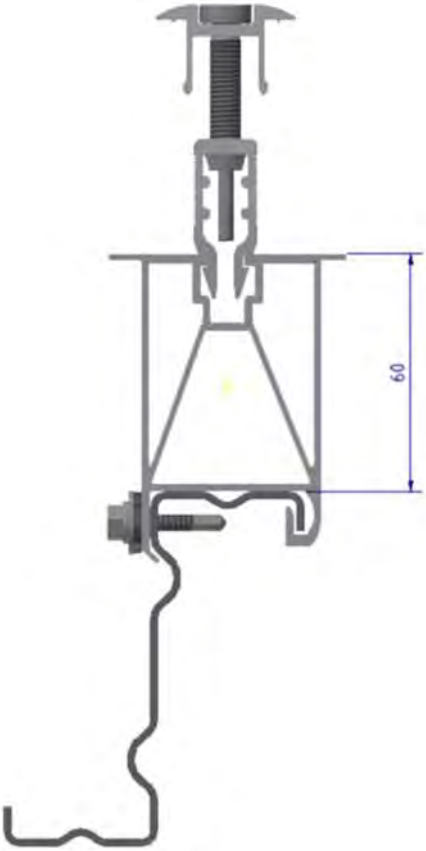

14. MAINTENANCE AND CARE

We recommend

INSPECTION OF THE SOLAR POWER SYSTEM

- after exceptional weather conditions (storm, heavy snowfall or rain, etc.)
- after natural earth tremors (earthquakes, landslides, settlements, etc.)

MAINTENANCE TO THE SYSTEM (mechanical)

- Cleaning of the modules
- Inspection of the screw joints
- Inspection of the system for corrosion
- Maintenance of access roads and walkways
- Terrain maintenance
- inspection of the subsoil
- Removal of dirt deposits and vegetation from the frame
- Determination of the environmental corrosivity and measuring the zinc coating thickness
- Inspection of concrete foundations if installed.

CORRECTIVE MAINTENANCE OF THE SOLAR POWER SYSTEM

in the event of damage to the frame or changes to the soil (e.g. removal of corrosion, replacement of defective components, fastening of loosened screw connections, etc.)

ATTENTION

Appropriate maintenance of the mounting structure can be a prerequisite for guarantee and warranty claims. In this case, please observe the maintenance instructions for tilted ground-mounted racks by Schletter Solar GmbH.

15. DISASSEMBLY AND DISPOSAL

DANGER

- The system works with high voltage!
- Observe all instructions and safety information provided by the manufacturer of the PV modules or other electrical components before taking the system out of service / shutting it down.
- Only have work on or with electrical components carried out by appropriately qualified electricians. Even if the system is disconnected from the electricity grid, the PV modules can still generate high voltages as soon as they are exposed to light. Even in this case there is danger of electric shock and electric arcs.

WARNING

- Always wear protective equipment (safety shoes, safety helmet, safety glasses, protective gloves and safety vest) when disassembling the FS Duo.
- Make sure that no unauthorized persons can enter the danger areas.
- Never position yourself under suspended loads
- Always observe the correct disassembly sequence. Disregarding this leads to the risk of heavy components falling down and to the danger of shearing and crushing hazard.

- Have the proper decommissioning confirmed by a qualified electrician before you start disassembling the FS Duo. The cabling between the different PV modules must also have been removed or disconnected by a qualified electrician before the mechanical disassembly of the system can be started.
- Have the system disassembled into transportable individual parts by a trained specialist.
- Comply with all the information and instructions in this installation manual.
- Make this installation manual available to the disassembly personnel.
- Have the disassembly works carried out in exactly the reverse assembly sequence.

Improper disposal can cause environmental damage
With respect for the environment it makes sense to properly dispose of materials that can be recycled! Observe local regulations and environmental standards.

15.1 Safe disposal of individual parts

- Separate the materials steel, plastics, electric scrap, aluminium, stainless steel, copper, brass, etc.
- Dispose of the components according to local regulations

16. WARRANTY AND LIABILITY

The responsibility for the proper installation of FS Duo lies principally with the customer. If there are doubts about the correctness of the procedures described, the customer/installer is obligated to contact the manufacturer.

16.1 Disclaimer

Warranty, guarantee and liability claims in case of personal and material damages against the manufacturer - Schletter Solar GmbH and its subsidiaries - are excluded if they are due to one or more of the following causes:

- Non-observance of the installation manual and/or the maintenance instructions in connection with a warranty extension
- Improper or inappropriate use of FS Duo
- Improper repair / maintenance
- Operation with spare parts that are defective or have not been approved by the manufacturer
- Unauthorized structural modifications or manipulation of the FS Duo, its devices or components
- Use of components from third-party manufacturers
- Neglection or non-compliance with the specified maintenance and/or testing and inspection intervals
- Force majeure and other circumstances for which Schletter Solar GmbH is not responsible

Schletter Solar GmbH assumes no liability for primary or consequential damages due to one or more of the causes listed above.

The installation manual, as well as the maintenance instructions in connection with a warranty extension, exclusively refer to the mechanical metal construction delivered by Schletter Solar GmbH.

Components of the photovoltaic plant itself, such as modules, cables and plug connectors, inverters or electrical switch boxes are not covered by this instruction manual and are thus excluded from any warranty and liability by Schletter Solar GmbH.

Material damage to objects that are not included in the scope of delivery is generally excluded from any liability.

More information on our systems can be found at our website:
www.schlettergroup.com

SCHLETTER
The Solar Mounting Group

SCHLETTER SOLAR GMBH
Alustrasse 1
83527 Kirchdorf
GERMANY

www.schletter-group.com

We reserve the right to changes, including technical modification.